Panel Light - 36W, adjustable CCT/brightness

Model Number: VL PL-DIM30120

VLATECH
Technical Data

Features:

- High power-efficiency
- Low structure
- Flat light surface
- Low temperature
- Long service life

Application:

- Offices
- Shops
- Schools
- Hospitals
- Technical facilities

3600 lm

100 lm/W

≥80 Ra

Optical Information

Color Temperature	3000K, 4000K, 5000K, 6000K
Lumen Output (lumen)	3600
Optics	110°
CRI	≥80
Led Chip	SMD4014
Led quantity	n/a
Lumen Maintenance (L70)	50,000h

Environmental Factor

Operating Temperature	-25 ~ +50°C
Protection Level	IP40
Warranty	5 years

Mechanical Information

Dimensions (W x L x H)	1195mm x 295mm x 10mm
Weight	4.2kg
Material	Aluminum, PCP
Power supply*	Flicker Free

*Also available: Standard, Triac dimmer, 0/1V-10C Dimmer, Push Dimmer, DALI

Electrical Information

Input Voltage	AC100-240V 50-60Hz
Power Consumption	36W
Dimmibility	Available

Panel Light - 36W, adjustable CCT/brightness

Model Number: VL PL-DIM30120

VLATECH
Technical Data

Dimensions

in mm

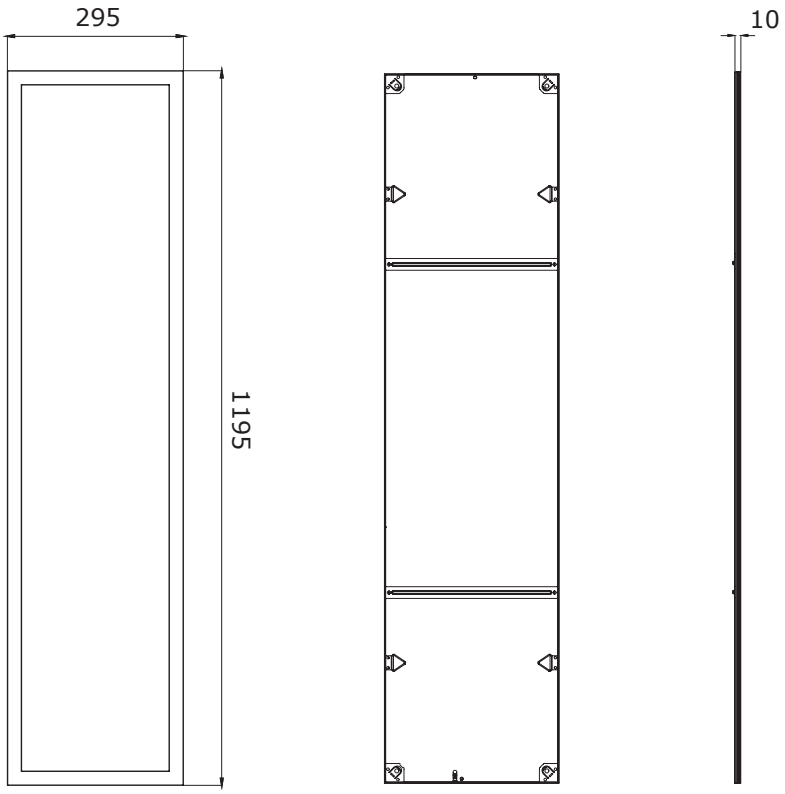

Product Description:

Surface-Mounted Frame

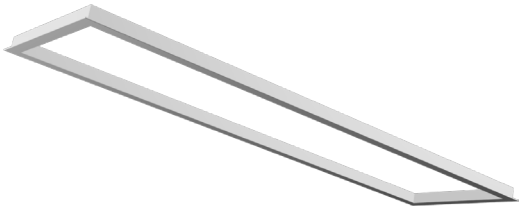

Recessed Frame

Panel Light - 36W, adjustable CCT/brightness

Model Number: VL PL-DIM30120

VLATECH
Technical Data

Adjust CCT and brightness by pushing switch or with remote control

CCT DIMMING		
Act	Short press	Long press
Function	Turn ON/OFF	Change CCT/Brightness
Effect	Turn ON	10% ↕ 100% Brightness adjustment
	Turn OFF	3000K ↕ 6000K CCT adjustment
Synchronous	Long press→Short press OFF→Long press	

NOTE

- Remote Control working after 20 seconds power on
- Press >6 seconds to match certain led panel with remote control
- Press >6 seconds to restore factory settings

Installation

DALI+PUSH

Advantages

- ◆digital dimming, free group control, no interfering to each other Infinite quantity in theory, free dimming
- ◆Flicker Free (stroboscopic index < 0.01)
- ◆Used with the terminal (computer, pad, APP...). To monitor the entire lighting system, two-way communication

Disadvantages

- ◆Need to rewire, increase the cost
- ◆Need to DALI protocol property, the price is high

Applicable occasions:

Large High-end offices,color rendering needing terminal centralized monitoring

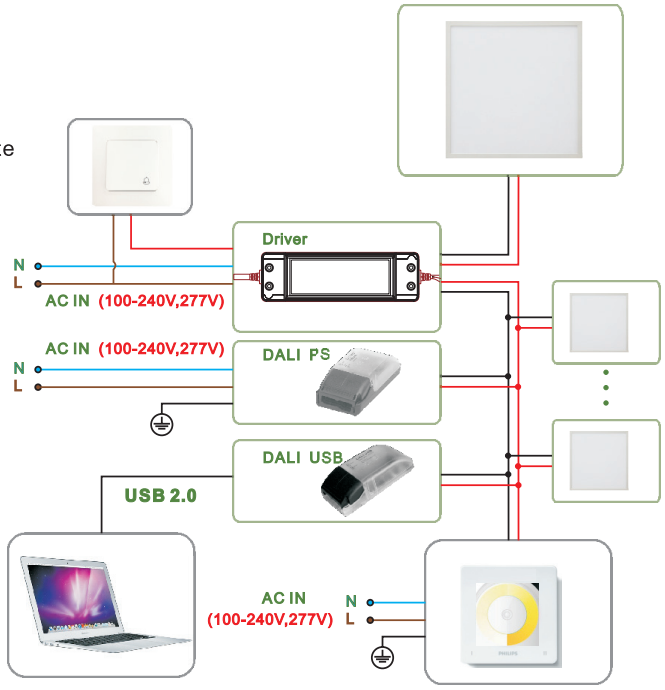

Block Diagram

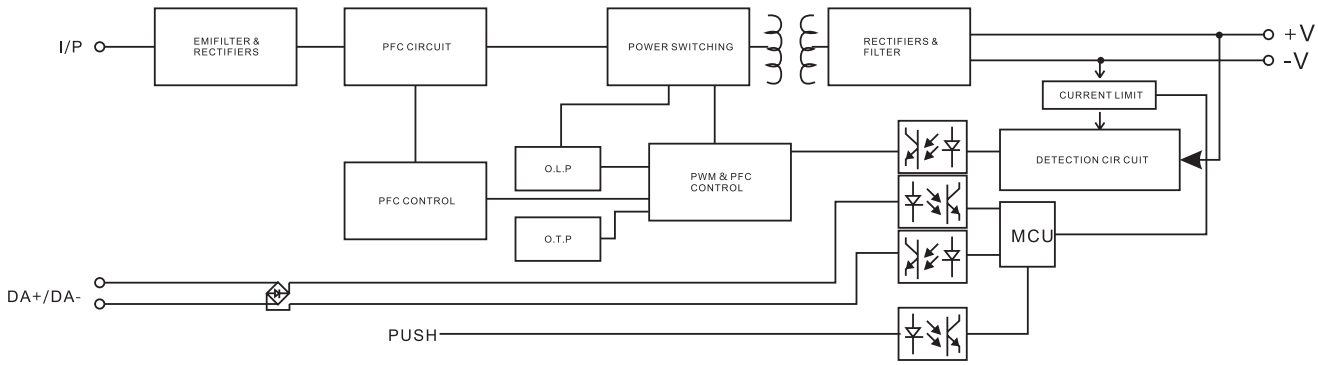

Synchronization Operation

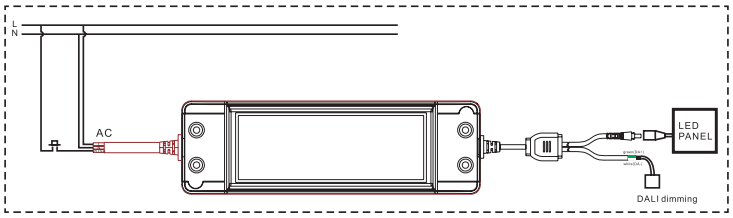

Installation

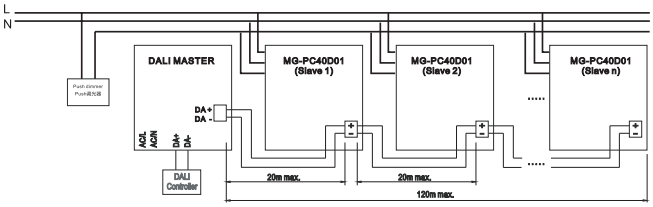

Panel Light - 36W, adjustable CCT/brightness

Model Number: VL PL-DIM30120

VLATECH
Technical Data

Installation

Installation Diagram

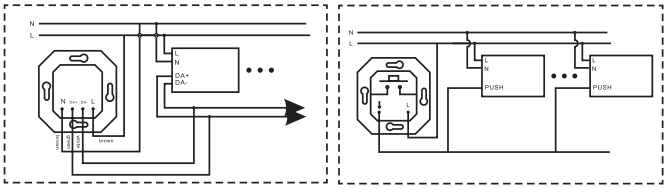

	Function	Pushing time
Short press	Turn ON/OFF	<0.5sec
Long press	Dim UP/DOWN	>0.5sec
Reset press	Reset	Short press OFF > Long press

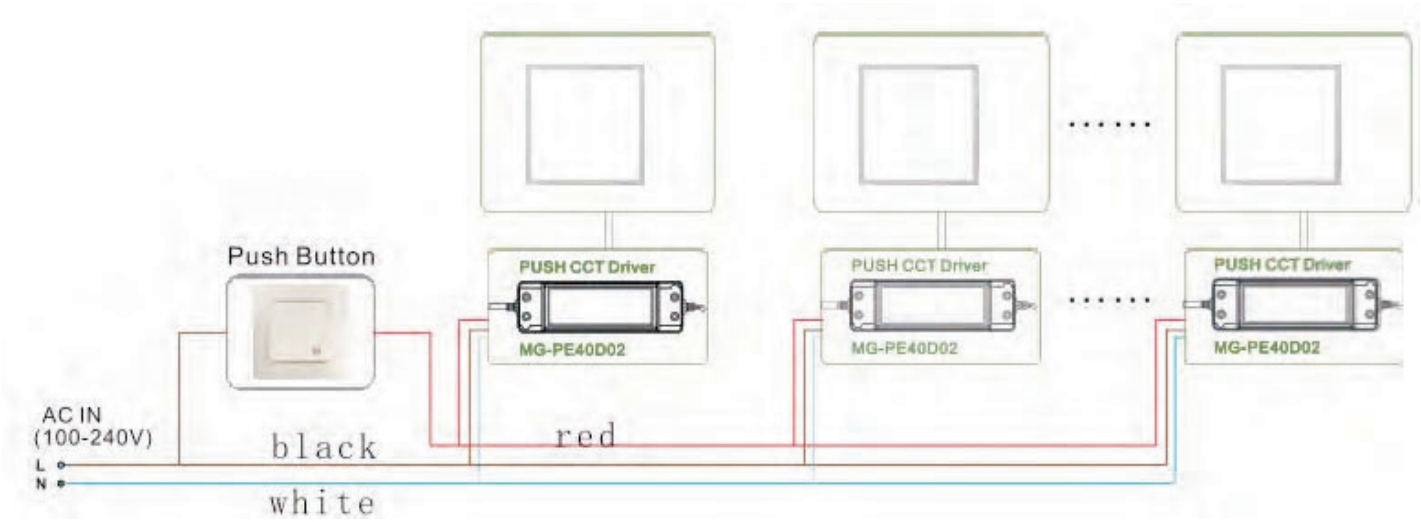

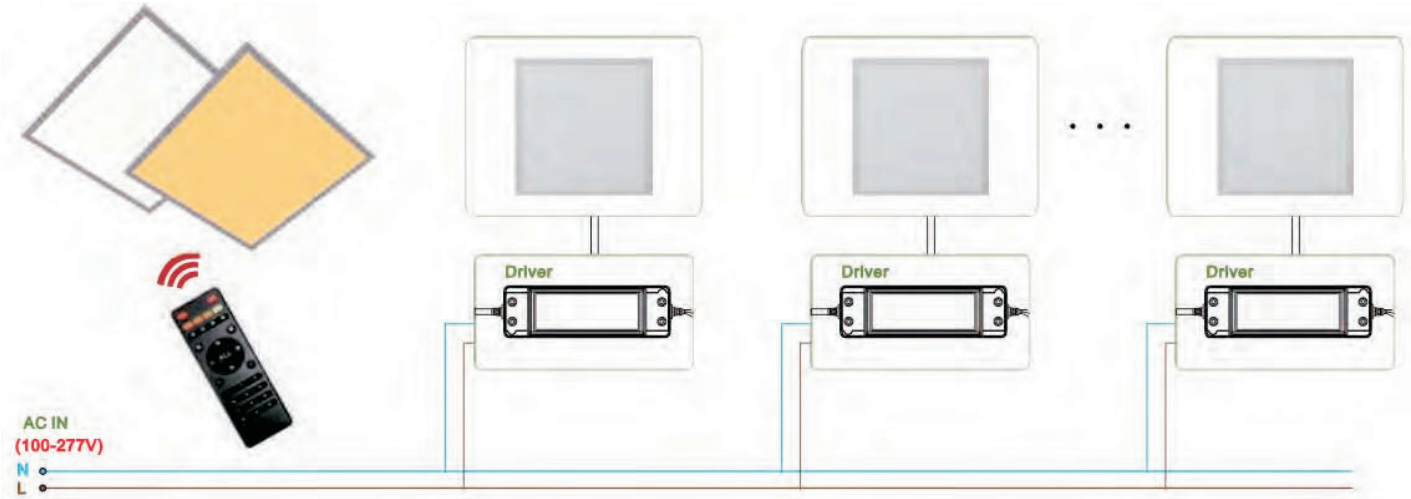

Panel Light - 36W, adjustable CCT/brightness

Model Number: VL PL-DIM30120

VLATECH
Technical Data

Photometrics

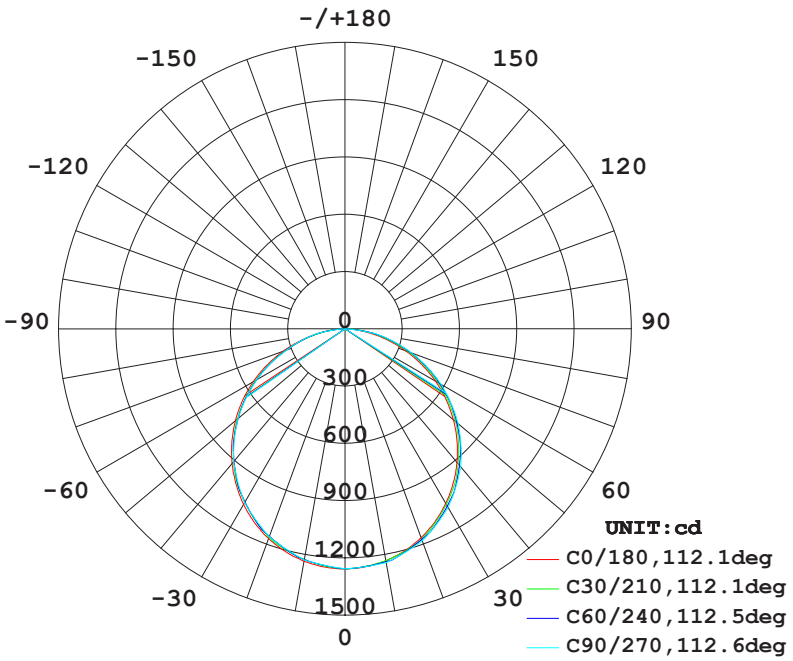

AVERAGE BEAM ANGLE(50%):112.3 DEG

Illuminance at Distance

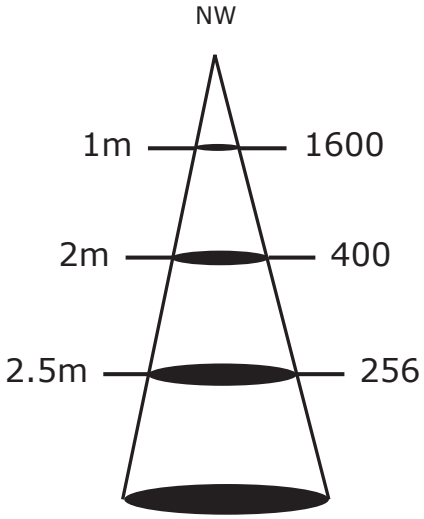

Lux (Typ.)

Power	Product Numbers	Electrical Numbers (in Finland)	Beam Angle	CCT	lux @ 1m	Lumen (lm)
36W	VL PLD-6060-36-F2		110°	3000K		100
				4000K	1600	
				5000K		
				6000K		

Also available:
Power: 40W and 48W
Power supply:
Standard, Triac dimmer, 0/1V-10C Dimmer, Push Dimmer, DALI